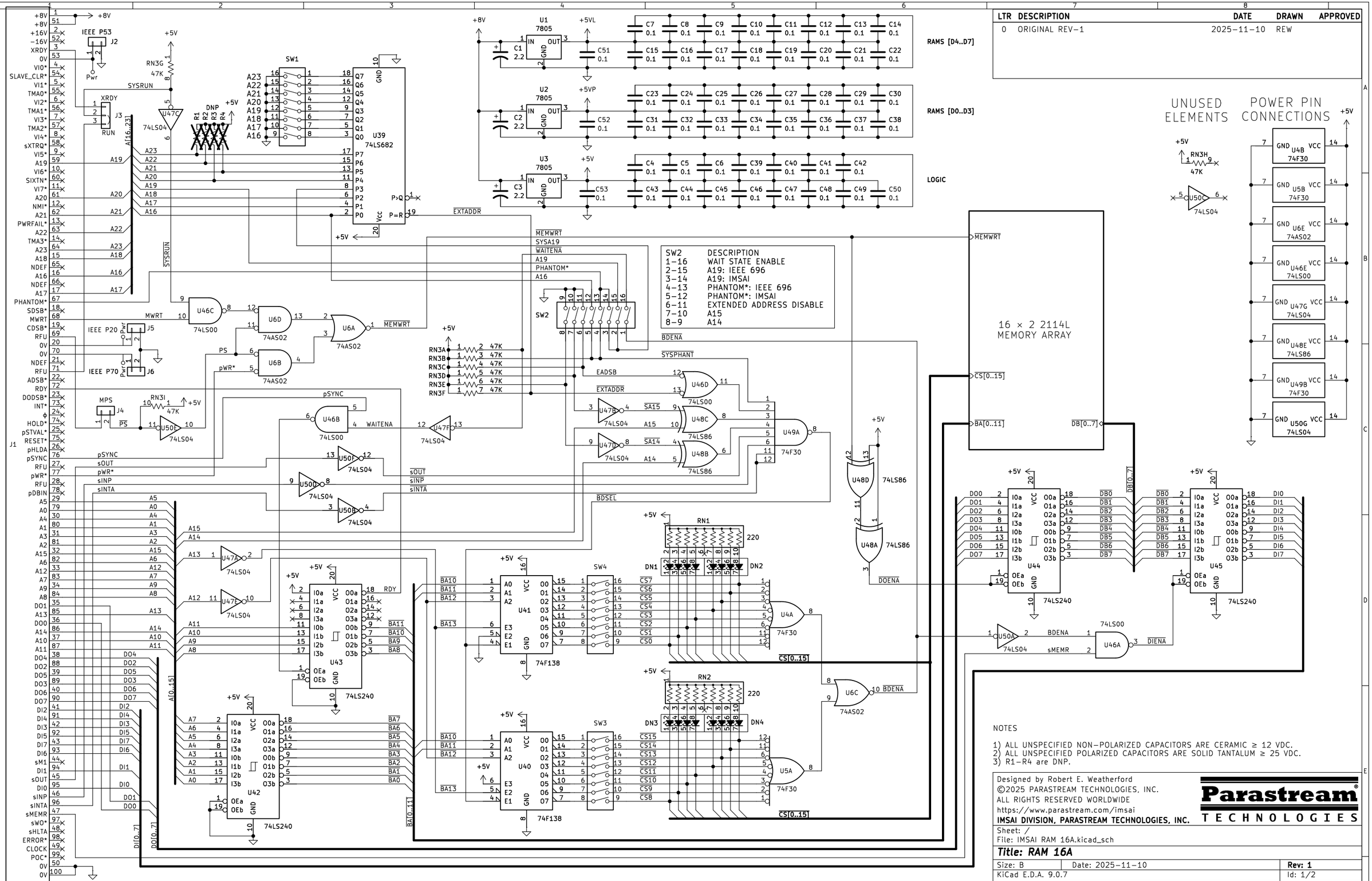

SW2	DESCRIPTION
1–16	WAIT STATE ENABLE
2–15	A19: IEEE 696
3–14	A19: IMSAI
4–13	PHANTOM*: IEEE 696
5–12	PHANTOM*: IMSAI
6–11	EXTENDED ADDRESS DISABLE
7–10	A15
8–9	A14

LTR	DESCRIPTION	DATE	DRAWN	APPROVED
0	ORIGINAL REV–1	2025–11–10	REW	

NOTES

1) ALL UNSPECIFIED NON–POLARIZED CAPACITORS ARE CERAMIC ≥ 12 VDC.
2) ALL UNSPECIFIED POLARIZED CAPACITORS ARE SOLID TANTALUM ≥ 25 VDC.
3) R1–R4 are DNP.

Designed by Robert E. Weatherford

©2025 PARASTREAM TECHNOLOGIES, INC.
ALL RIGHTS RESERVED WORLDWIDE

https://www.parastream.com/imsai

IMSAI DIVISION, PARASTREAM TECHNOLOGIES, INC.

Parastream TECHNOLOGIES

Sheet: /
File: IMSAI RAM 16A.kicad_sch

Title: RAM 16A

Size: B	Date: 2025–11–10	Rev: 1
KiCad E.D.A. 9.0.7		Id: 1/2

LTR	DESCRIPTION	DATE	DRAWN	APPROVED
0	ORIGINAL REV-1	2025-11-10	REW	

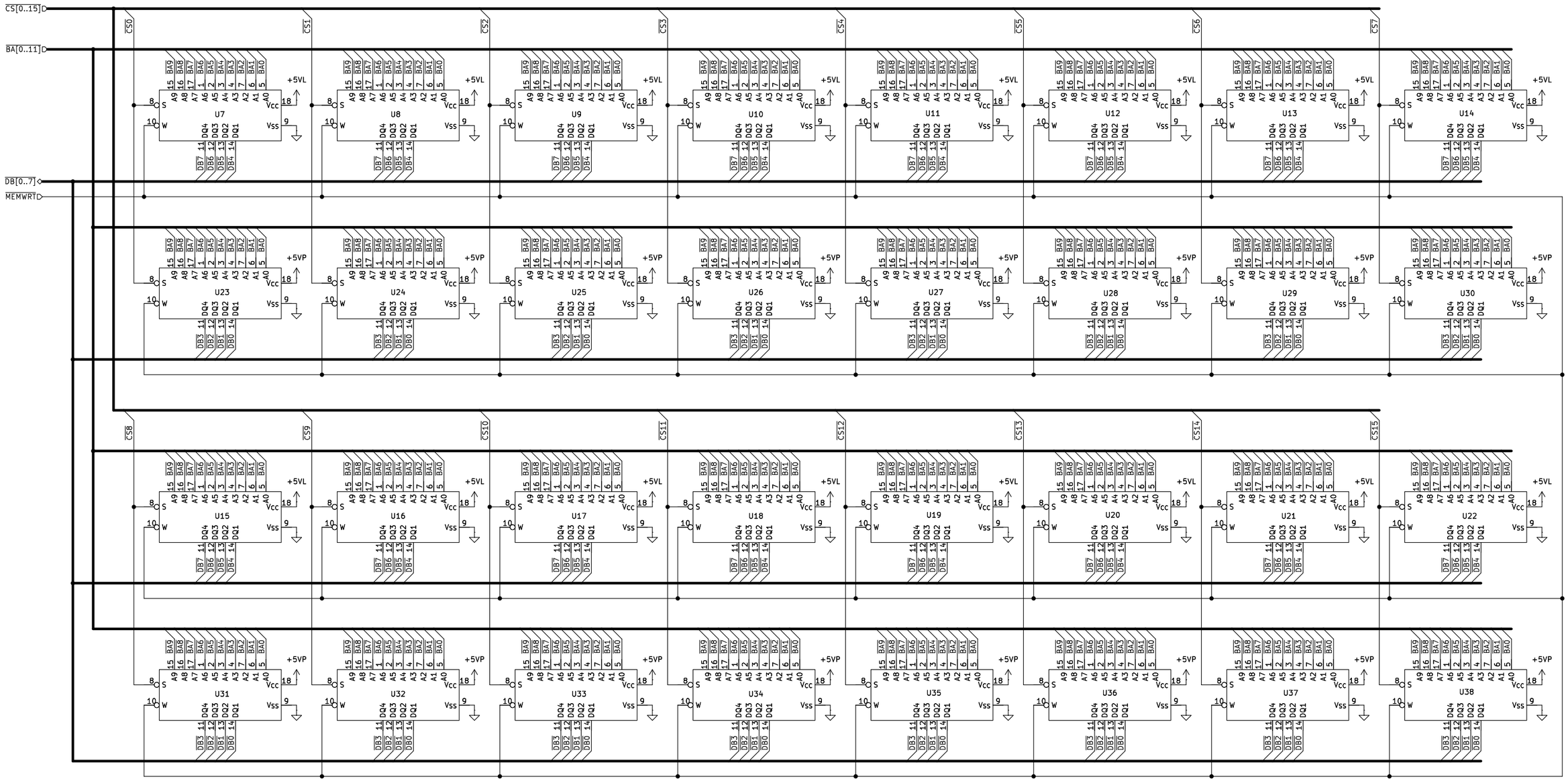

Designed by Robert E. Weatherford
©2025 PARASTREAM TECHNOLOGIES, INC.
ALL RIGHTS RESERVED WORLDWIDE
https://www.parastream.com/imsai
IMSAI DIVISION, PARASTREAM TECHNOLOGIES, INC.

Parastream TECHNOLOGIES

Sheet: /Memory Array/
File: IMSAI RAM 16A Memory Array.kicad_sch

Title: RAM 16A

Size: B	Date: 2025-11-10	**Rev: 1**
KiCad E.D.A. 9.0.7		Id: 2/2