REVISIONS			
LTR	DESCRIPTION	DATE	APPROVED
0	ORIGINAL REV. 3	5/76	
1	UPDATE & MOD.	12/76	

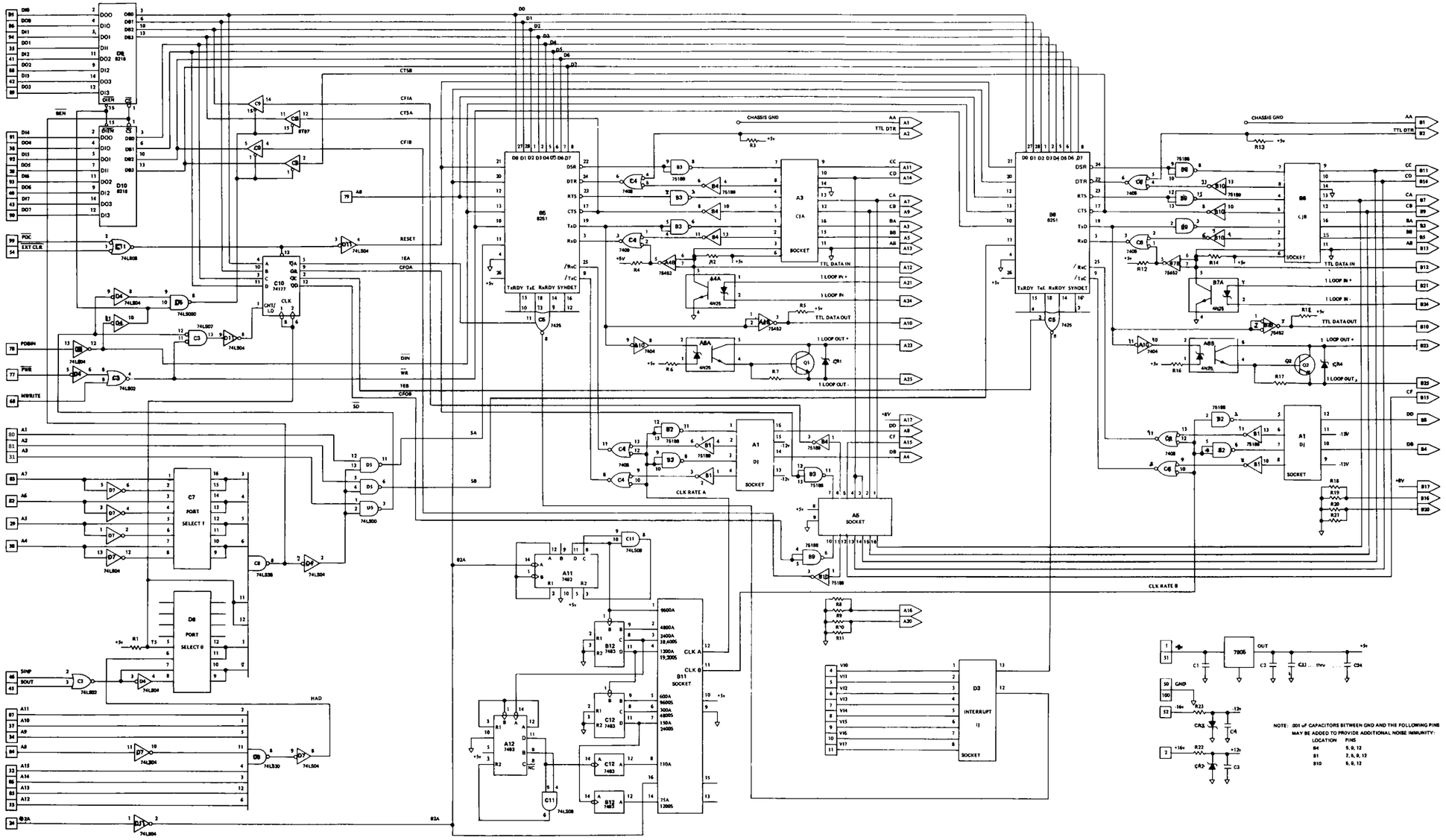

A1, A3, A5	OPTIONAL JUMPER SOCKET	R1, R2, R3	1K ¼W
A4B	75452	R13, R14	
A4A, A6A, A6B	4N25	R4, R5, R6	220 ¼W
A10	7404	R12	
A11, A12	7493	R15, R16	
B1, B4, B10	75189	R7, R17	4.7 ¼W
B2, B3, B9	74188	R8, R9, R10, R11	470 ¼W
B5, B6	8251	R18, R19, R20, R21	
B7A	4N25		
B7B	75452		
B8, B11	OPTIONAL JUMPER SOCKET	R22, R23	56 ½W
B12	7493		
C3	74LS02		
C4, C6	7408		
C5	7425		
C7	PORT SELECT 1		
C8	74LS30		
C9	8T97		
C10	74177		
C11	74LS08		
C12	7493		
D3, D6	OPTIONAL JUMPER SOCKET		
D4, D7, D11	74LS04		
D5	74LS00		
D8	74LS30		
D9, D10	8216		
C1 thru C4	33 uF		
C11 thru C24	.1 uF		
CR1, CR4	1N914		
CR2, CR3	1N4742		
Q1, Q2	2N3904		

© 1977 IMSAI MFG. CORP.
SAN LEANDRO, CA.
ALL RIGHTS RESERVED WORLDWIDE
MADE IN U.S.A.

CAM-32

TOLERANCES UNLESS OTHERWISE SPECIFIED FRACTIONS DEC. ANGLES	IMSAI MFG. CORP. SAN LEANDRO, CA.	
APPROVALS / DATE	SCHEMATIC DIAGRAM SIO 2–2 REV. 3 12/76	
DRAWN		
CHECKED	SCALE / SIZE	DRAWING NO 91–4010018
	DO NOT SCALE DRAWING	SHEET